PRODUCT DATASHEET
PANEL 625 IP54 36 W 3000 K OP WT

PANEL 625 IP54 | Square recessed panel luminaires with IP54 protection and high luminous flux, 625 x 625 mm

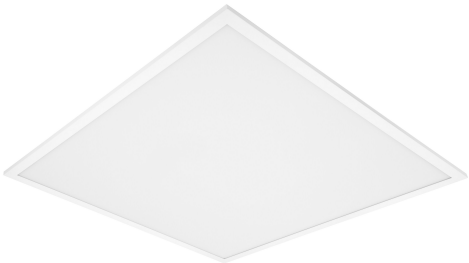

Areas of application

- Direct replacement for luminaires with fluorescent lamps
- Hospitals
- Laboratories
- Suitable for recessed ceiling systems with grid size of 625 x 625 mm
- Kitchens, workspaces

PERFOR-
MANCE
CLASS

Product benefits

- Suitable for use in dusty and damp locations thanks to high IP rating
- High lumen output reduces the total number of panels per installation
- Energy savings of up to 50 % (compared to luminaires that use fluorescent lamps)
- Low flicker light thanks to special electronic control gear
- 5 years guarantee
- Versions with DALI ECG available

Product features

- Type of protection: IP54
- Luminous flux: up to 4,320 lm
- High luminous efficacy: up to 120 lm/W
- Lifetime (L80/B50): up to 60,000 h (at 25 °C)

© 2024, LEDVANCE GmbH. All rights reserved.

- Aluminum housing, PMMA diffuser

© 2024, LEDVANCE GmbH. All rights reserved.

TECHNICAL DATA

Electrical data

Nominal wattage	36.00 W
Nominal voltage	220…240 V
Mains frequency	50/60 Hz
Nominal current	190.000 mA
Inrush current	15.0 A
Inrush current time T_{h50}	460 µs
Max. number of luminaires per miniature circuit breaker B16	17
Max. number of luminaires per miniature circuit breaker C10	35
Max. number of luminaires per miniature circuit breaker C16	56
Power factor λ	> 0.90
Total harmonic distortion	20 %
Protection class	II
Operating mode	External LED driver

Photometrical data

Luminous flux	4320 lm
Luminous efficacy	120 lm/W
Color temperature	3000 K
Light color (designation)	Warm White
Color rendering index Ra	> 80
Standard deviation of color matching	3 sdcm
Luminous intensity	-
Low flicker	Yes
Flickering metric (Pst LM)	-
Stroboscope effect metric (SVM)	-
Photobiological safety group acc. to EN62778	RG0
Beam angle	120 °

© 2024, LEDVANCE GmbH. All rights reserved.

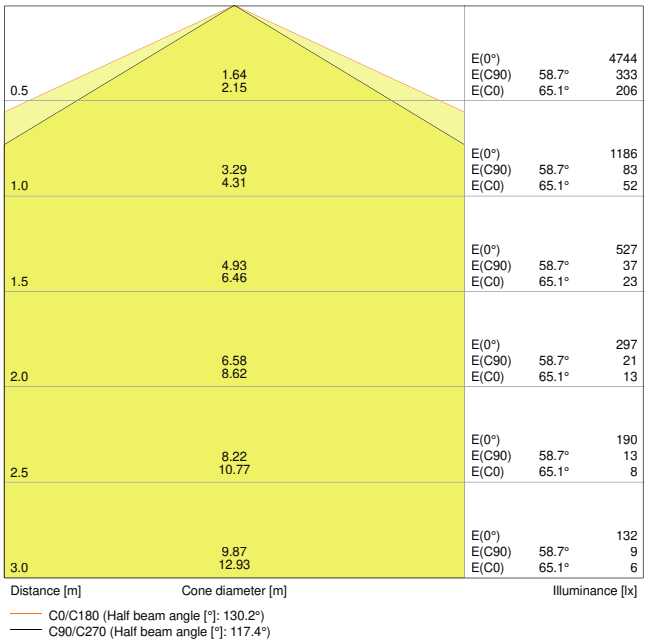

Panel 625 36W 3000K OP IP54

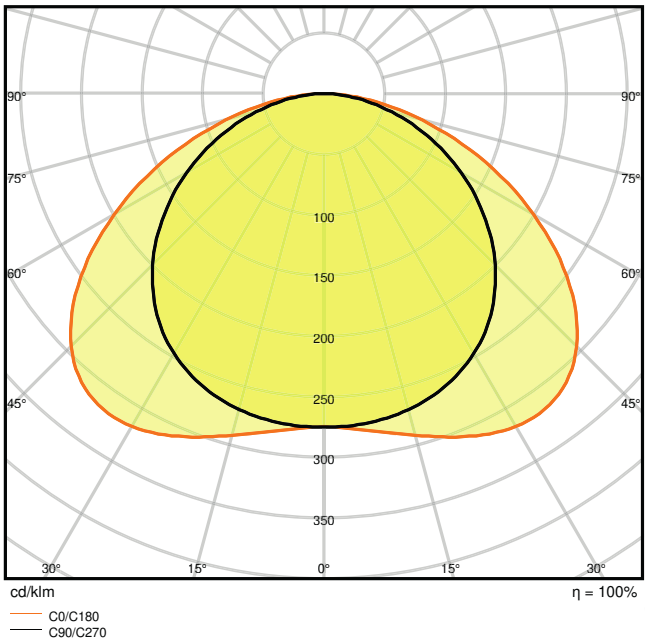

Panel 625 36W 3000K OP IP54

Dimensions & Weight

Length	620.00 mm
Width	620.00 mm
Height	12.60 mm
Product weight	3200.00 g

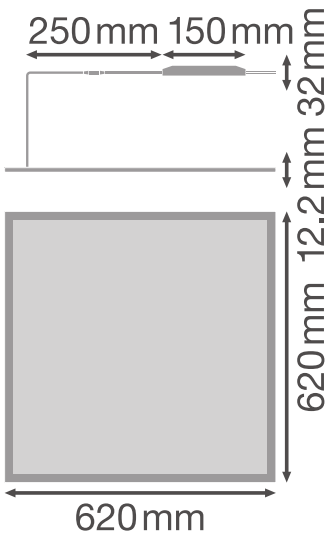

PANEL 625 IP54

© 2024, LEDVANCE GmbH. All rights reserved.

Materials & Colors

Product color	White
Housing color	White
Body material	Steel
Cover material	Polymethylmethacrylate (PMMA)
Light emitting surface material	PMMA
Glow Wire Test according to IEC 60695-2-12	650 °C
Mercury content	0.0 mg

Application & Mounting

Ambient temperature range	-10…+45 °C
Type of connection	Screw terminal, 2-Pole (L,N)
Type of protection	IP54/IP20
Protection class IK (shock resistance)	IK03
Dimmable	No
Mounting type	Recessed/Suspended/Surface
Mounting location	Ceiling / Wall
Application environment	Indoor
Mounting length	600,0 mm
Mounting width	600,0 mm
Mounting depth	50,0 mm
LED module replaceable	Not replaceable
With light source	Yes

Lifespan

Lifespan L70/B50 at 25 °C	80000 h [1)]
Lifespan L80/B10 at 25 °C	60000 h [1)]
Lifespan L90/B10 at 25 °C	35000 h
Number of switching cycles	25000

1) t[h]: L70 / B50 @ 25 °C (Ta), t[h]: L80 / B10 @ 25 °C (Ta), t[h]: L90 / B10 @ 25 °C (Ta)

Control gear

ECG - Length	150 mm
ECG - Width	41.4 mm

© 2024, LEDVANCE GmbH. All rights reserved.

ECG - Height	30 mm

Certificates & Standards

Standards	CE / CB / ENEC / TÜV SÜD / EAC
Luminaire with limited surface temperature, "D sign"	No
Ball shot safe	No

Accessories Optional

Product image	Product name	EAN
	CONNECTOR BOX 5POLE L/N 4x	4058075473010
	PANEL 625 RECESSED MOUNT FRAME	4058075402904
	PANEL Suspension Kit	4058075402928
	PANEL RECESSED MOUNT CLIPS VAL 4x	4058075409859
	PANEL 625 SURFACE MOUNT KIT H75	4058075472938
	PANEL 625 SURFACE MOUNT KIT H70 VAL	4058075402867

EQUIPMENT / ACCESSORIES

- Accessories for several mounting options available
- External control gear included

© 2024, LEDVANCE GmbH. All rights reserved.

DOWNLOAD DATA

	Documents and certificates	Document name
PDF	User instruction	PL OP IP54
PDF	Addon Technical Information	PL OP IP54
PDF	Packaging insert	Legal insert DL UGR19 PFM
PDF	Declarations Of Conformity CE	Declaration of Conformity Panel 600 625 MP OP LEDV
PDF	Declarations Of Conformity CE	Attestation of Conformity Panel 36W OP IP54 TÜV
PDF	Declarations Of Conformity CE	Attestation of conformity PANEL
PDF	Declarations Of Conformity UKCA	PANEL 625
PDF	Certificates	Certificates ENEC and TUV PANEL

	Photometric and lighting design files	Document name
IES	IES file (IES)	Panel 625 36W 3000K OP IP54
LDT	LDT file (Eulumdat)	Panel 625 36W 3000K OP IP54
ULD	ULD file (DIALux)	PANEL625IP5436W3000KOPIP54WT
ROLF	ROLF file (RELUX)	PL 625 36W-3000K
	UGR file (UGR table)	Panel 625 36W 3000K OP IP54
	LDC typ cone	Panel 625 36W 3000K OP IP54
	LDC typ polar	Panel 625 36W 3000K OP IP54

	CAD/BIM files	Document name
RFA	BIM_Revit_3D	Panel IP54

© 2024, LEDVANCE GmbH. All rights reserved.

	Tender texts	Document name
	Tender documents	PANEL 625 IP54 36 W 3000 K OP WT-EN

LOGISTICAL DATA

Product code	Packaging unit (Pieces/Unit)	Dimensions (length x width x height)	Gross weight	Volume
4058075149526	Folding box 1	650 mm x 62 mm x 650 mm	3510.00 g	26.20 dm^3
4058075149533	Shipping box 4	665 mm x 270 mm x 670 mm	14950.00 g	120.30 dm^3

The mentioned product code describes the smallest quantity unit which can be ordered. One shipping unit can contain one or more single products. When placing an order, for the quantity please enter single or multiples of a shipping unit.

ADDITIONAL CATALOG INFORMATION

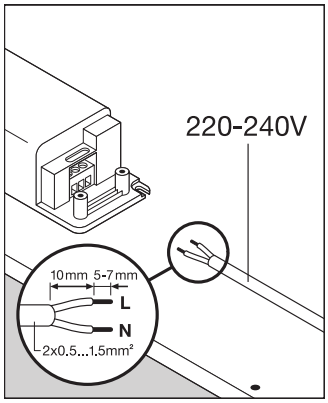

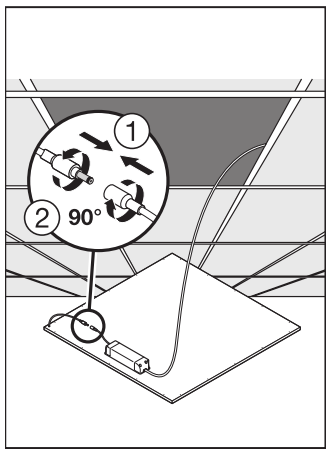

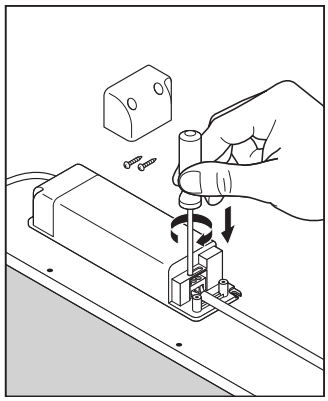

References / Links

– For Guarantee see www.ledvance.com/guarantee

DISCLAIMER

Subject to change without notice. Errors and omission excepted. Always make sure to use the most recent release.

© 2024, LEDVANCE GmbH. All rights reserved.